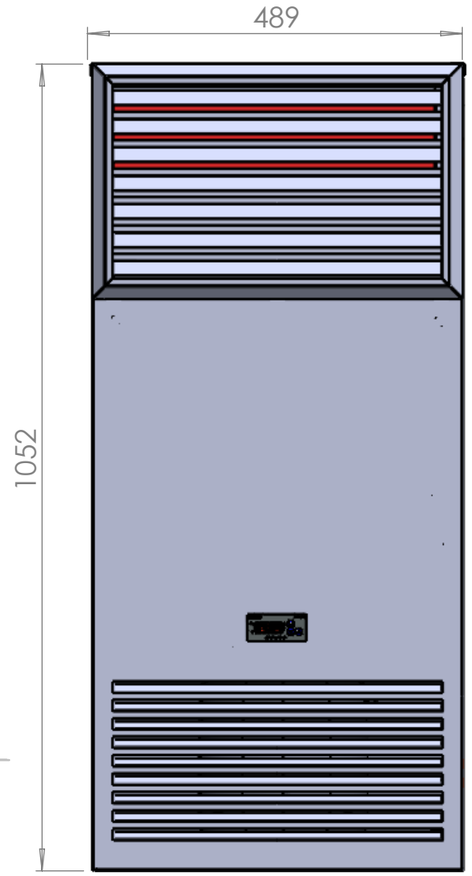

ÖN GÖRÜNÜŞ
FRONT VIEW

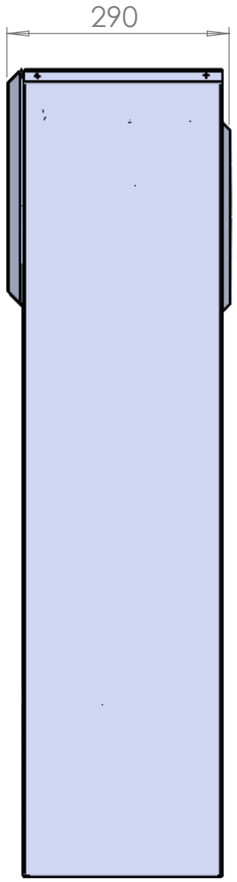

YAN GÖRÜNÜŞ
SIDE VIEW

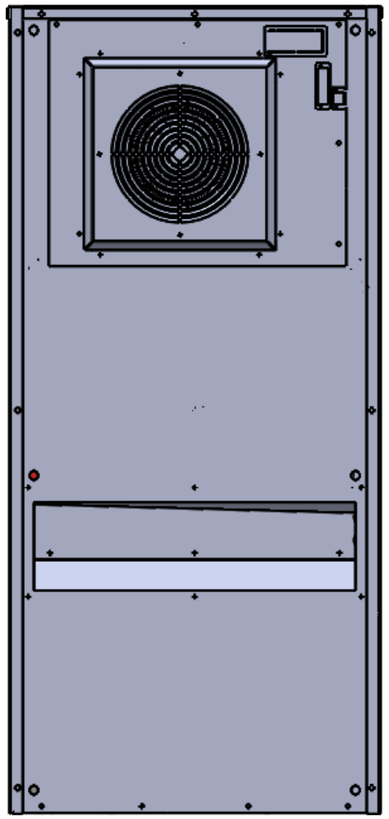

ARKA GÖRÜNÜŞ
BACK VIEW

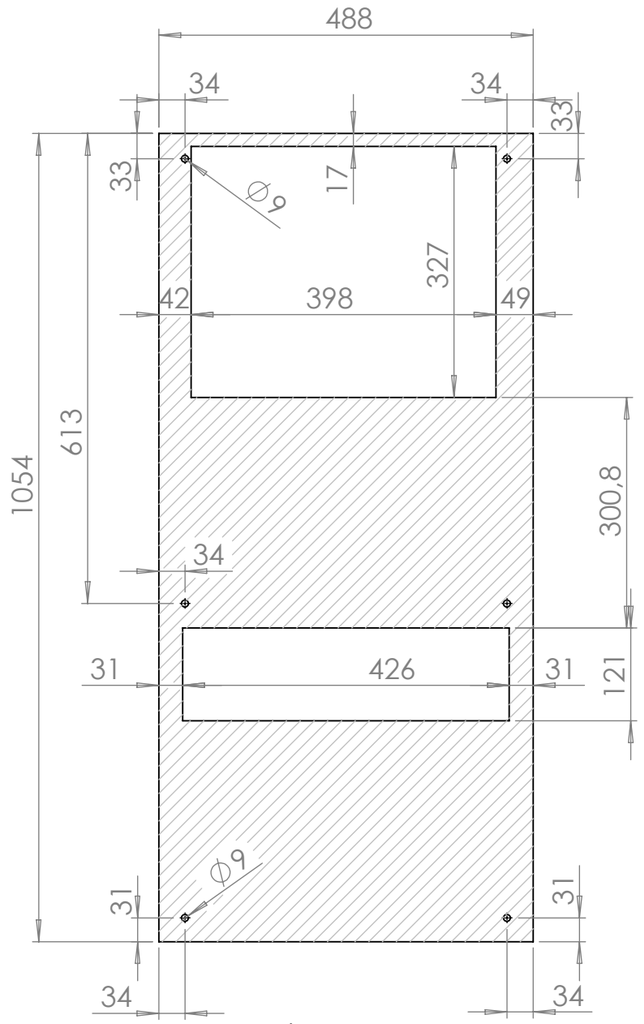

KESİM ŞABLONU
CUTTING TEMPLATE

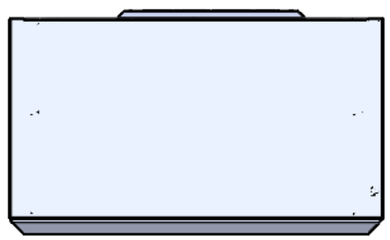

ÜST GÖRÜMÜŞ
TOP VIEW

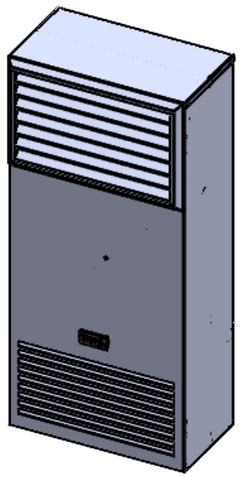

GENERAL TOLERANCE	
0 - 30	± 1.0
30 - 120	± 1.5
120 - 315	± 2.0
315 - 1000	± 2.0
1000 -2000	± 4.0
2000 - 4000	± 6.0
4000 - 8000	± 8.0
8000 - 12000	± 10.0

THIS PRINT IS OWNED BY KLIMEXS. IT'S CONTENTS MUST NOT BE COPIED OR DISCLOSED TO OUTSIDERS. DIMENSIONS ARE INDICATED AS MILLIMETRES

SCALE 1:10

DRAWN BY	CONTROL	DATE
SELİN SEVİM		09.08.2024

MATERIAL	MATERIAL THICKNESS

klimexs® Industrial Cooling Systems

PART/ASSEMBLY NAME	DRAWING DESCRIPTION
BTK-04000-OD-G-EMRWALKHPLP-R134A-35-R0000	BTK4000-OUTDOOR