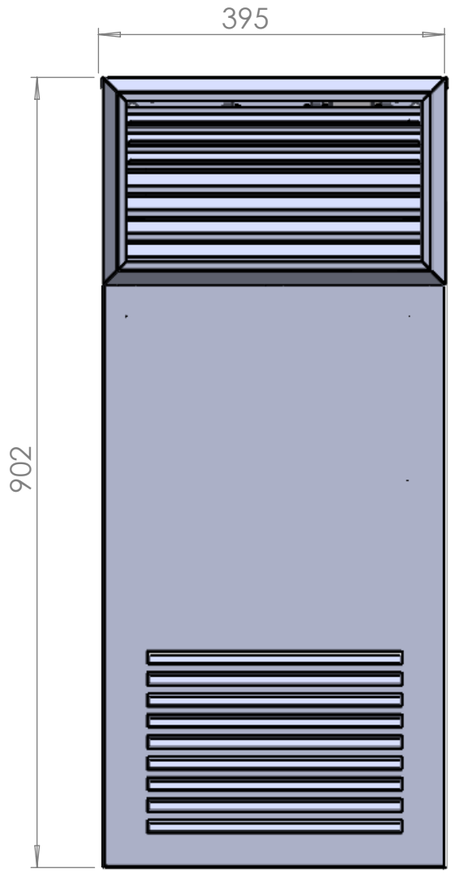

ÖN GÖRÜNÜŞ
FRONT VIEW

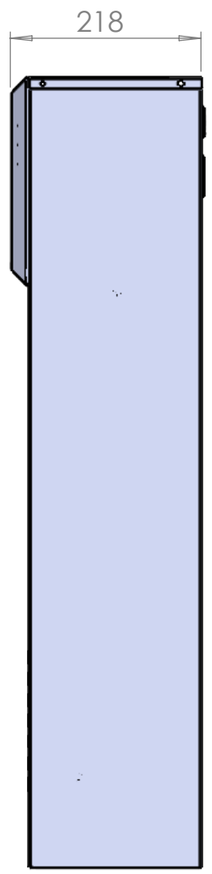

YAN GÖRÜNÜŞ
SIDE VIEW

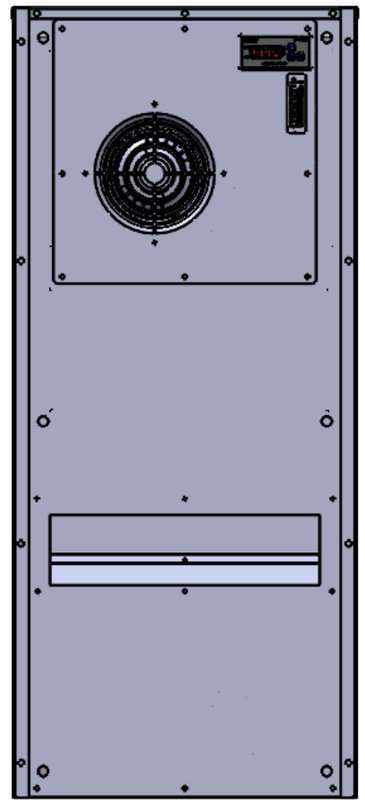

ARKA GÖRÜNÜŞ
BACK VIEW

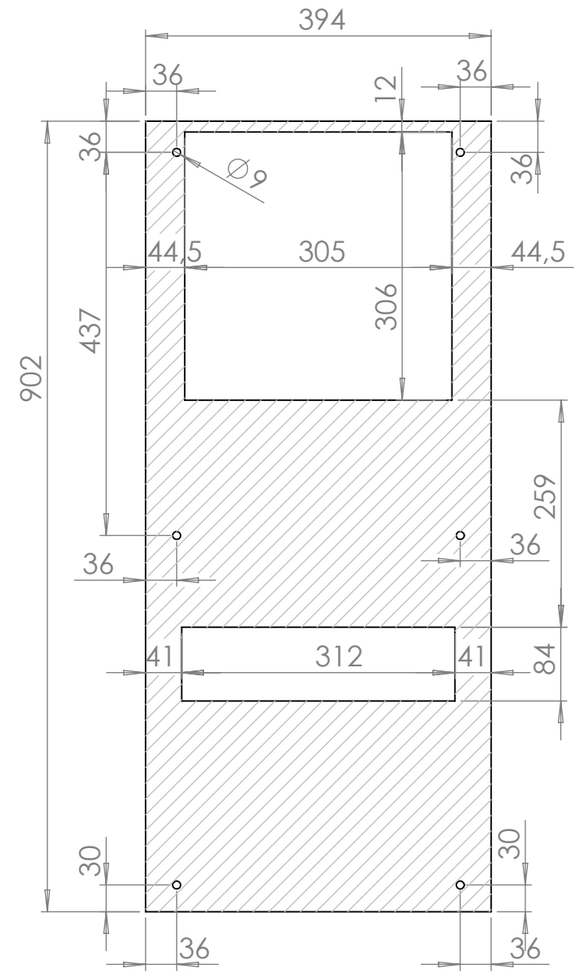

KESİM ŞABLONU
CUTTING TEMPLATE

ÜST GÖRÜNÜŞ
TOP VIEW

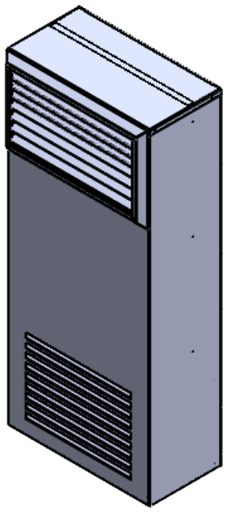

GENERAL TOLERANCE	
0 - 30	±1.0
30 - 120	±1.5
120 - 315	±2.0
315 - 1000	±2.0
1000 -2000	±4.0
2000 - 4000	±6.0
4000 - 8000	±8.0
8000 - 12000	±10.0

THIS PRINT IS OWNED BY KLIMEXS. IT'S CONTENTS MUST NOT BE COPIED OR DISCLOSED TO OUTSIDERS. DIMENSIONS ARE INDICATED AS MILLIMETRES

SCALE 1:10

DRAWN BY	CONTROL	DATE
SELİN SEVİM		09.08.2024

MATERIAL	MATERIAL THICKNESS

klimexs® Industrial Cooling Systems

PART/ASSEMBLY NAME	DRAWING DESCRIPTION
BTK-01500-OD-G-EMRWALKHPLP-R134A-25-R0000	BTK1500-OUTDOOR